ETB20 SERIES Clamping

TÜV R350002918 E133988(R)

SPECIFICATIONS

- Pitch: 5.0mm, 10.0mm
- Wire range: 14 AWG to 22 AWG.
- No. of pole per Block: 2 or 3
- Rated: 10 Amp, 300 VAC
- Housing: Polyamide 66, Blue
- Terminals: Tin plated over Brass
- Screws: M2.5x0.45P, Yellow Chromated Zinc plated over Steel
- Wire Cage: Nickel plated over Zinc Alloy

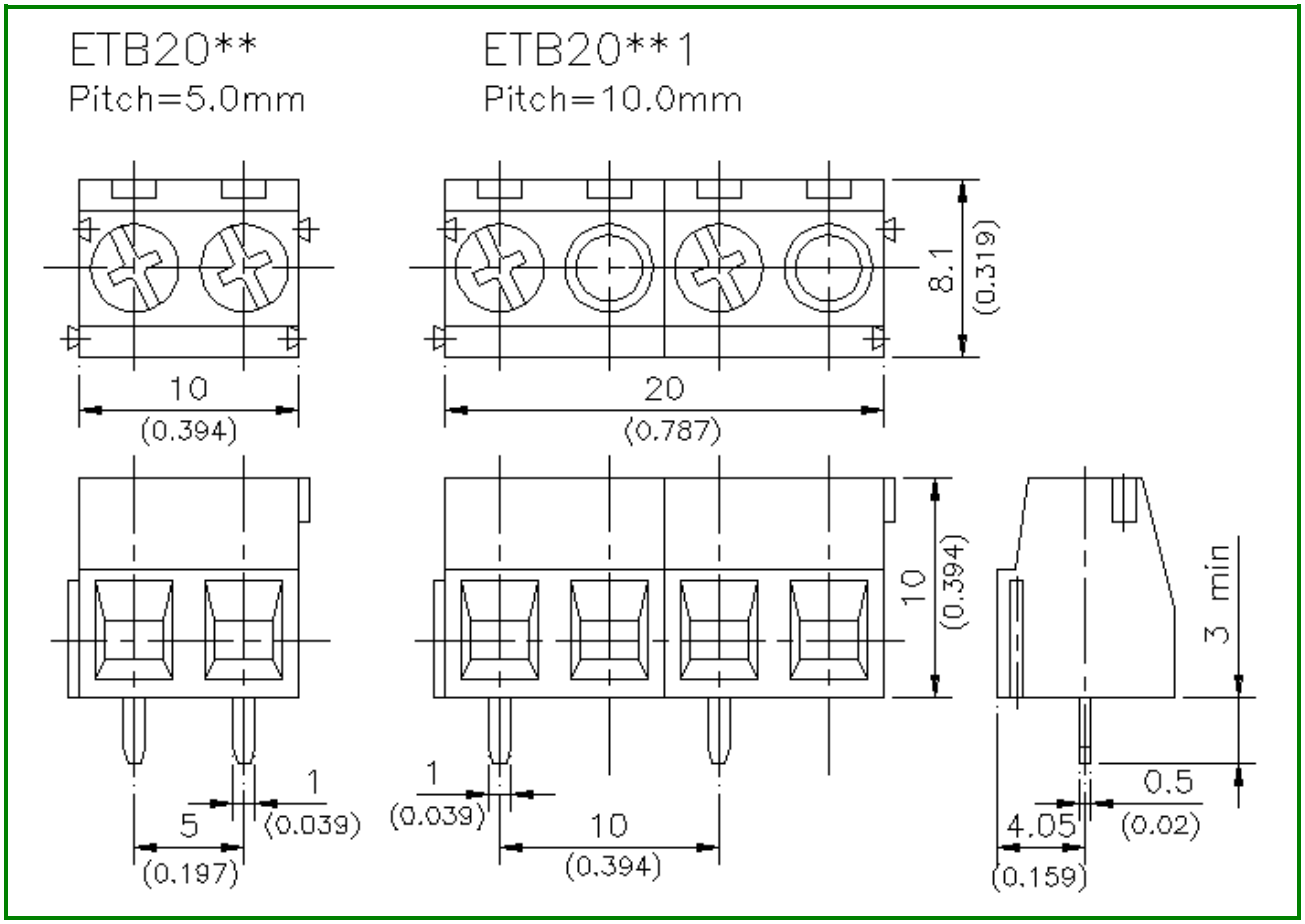

mm to inch

**NUMBER OF POLE 02~30.

Mm	0.5	1	3	3.5	4.05	5	6	6.45	7	8.1	10	11	12	20	
inch	0.02	0.039	0.118	0.138	0.159	0.197	0.236	0.254	0.276	0.319	0.394	0.433	0.472	0.787	